A Front End Self-Sustained LLC Resonant Converter

Mohamed Z. Youssef, IEEE member, and Praveen K. Jain, Fellow IEEE
Dept. of Electrical & Computer Engineering, Queen's University, Kingston, Ontario K7L 3N6
mohamed.youssef@ece.queensu.ca, praveen.jain@ece.queensu.ca

Abstract — This paper presents a LLC resonant converter working with a self-sustained oscillation controller (SSOC). It provides the optimization of the converter elements ratings, and has an overall higher efficiency than when working with the conventional variable frequency controller (VF). A performance comparison for the converter is performed for both control techniques. It is shown that the self-sustained oscillation controller (SSOC) results in a ten times increase in the value of the magnetizing inductance, which simplifies the transformer. Further, the SSOC shows robustness against the variation of the components due to real time uncertainty. Analytical, and simulation results verifies the performance improvement of the proposed converter.

I. INTRODUCTION

Resonant converters are the potential candidates for future high-power, and high-density power supplies. They have high working efficiency because of their lossless switching. Also, they can be operated at very high switching frequency to obtain compact packaging. In a distributed power system (DPS), the front-end converter plays an important role by incorporating the input requirements and provides a stable and well-regulated voltage to the down stream converters. One of the key requirements for this converter is to maintain high efficiency from full load to significantly reduced load. It is well known that the series resonant converter has high reduced-load efficiency but it loses the voltage regulation at no load. In addition, under the conventional variable frequency control (VF), this converter needs a large operating frequency range to keep the zero voltage switching (ZVS), and, therefore, has high component rating [2], [3].

In a LLC resonant converter voltage regulation problem at low-load is overcome by using a low value of magnetizing inductance of high frequency output transformer [4]. However, to achieve the low value of magnetizing inductance in high power applications, multiple air gaps are normally introduced in the core of the transformer. Multiple air gaps require air tunnel through the core to cool the isolated pieces of the gaped core material. This results in a complex and expensive transformer design. The self-sustained oscillation controller (SSOC) results in ten times increase in the value of the magnetizing inductance, which simplifies the transformer design. In addition, it shrinks the operating frequency range, which in turn helps reducing the ratings of the resonant tank components, and the frequency dependent losses [5]. Detailed design guidelines and performance improvements are presented. The paper is organized as follows: in section II; a detailed description of the operation of the proposed converter under the self-sustained oscillation mode is studied and the stability conditions and limit cycle operation given, in section III; the main steady state design characteristics are introduced, in section IV; a comparison between the converter robustness against the aging of the resonant tank elements is given under both VF and SSOC, in section V; the simulation results are presented to verify the proposed work.

II. GENERALIZATION OF THE LLC RESONANT CONVERTER IN SELF-SUSTAINED OSCILLATION MODE

In order to get any converter to work under the SSOC mode; its operation should be described using the relation:

$$F(j\omega) = \frac{-1}{H_e(A,\ \gamma)} \qquad (1)$$

where $F(j\omega)$ is the open loop transfer function of the series-parallel converter between the feedback variable and the inverter output voltage (V_{ab}), (A) is the amplitude of the feedback variable, and (γ) is the control angle. The describing function of the converter plus the inverter is expressed by the following describing function: -

$$H_e(A,\gamma) = \frac{4Vg}{\pi A}(\cos(\gamma) - j\sin(\gamma)) \quad (2)$$

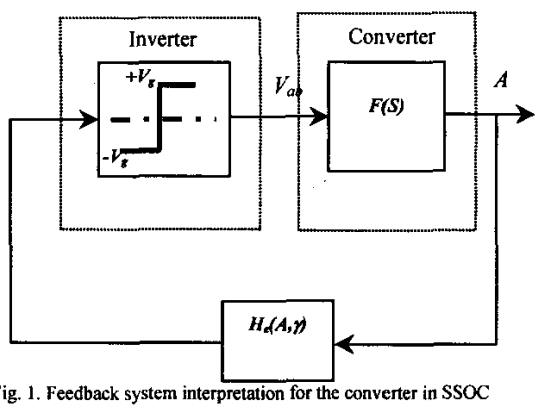

Fig. 1. Feedback system interpretation for the converter in SSOC

The proposed LLC converter operates from a dc input voltage, represented by (v_g) in Fig. 2. The proposed resonant converter consists of a full bridge inverter and a resonant circuit, (L_s, C_s), which is placed between the inverter and the load. The full bridge inverter voltage (v_{ab}) feeds the resonant circuit and the load. When the load is comprised of a full bridge diode rectifier followed by a capacitive output filter the load can be represented by an equivalent alternating current (ac) resistor given by $R_{eq} = 8/\pi^2 N^2 R_L$, where (R_L) is actual load resistance, and (N) is the transformer turns ratio.

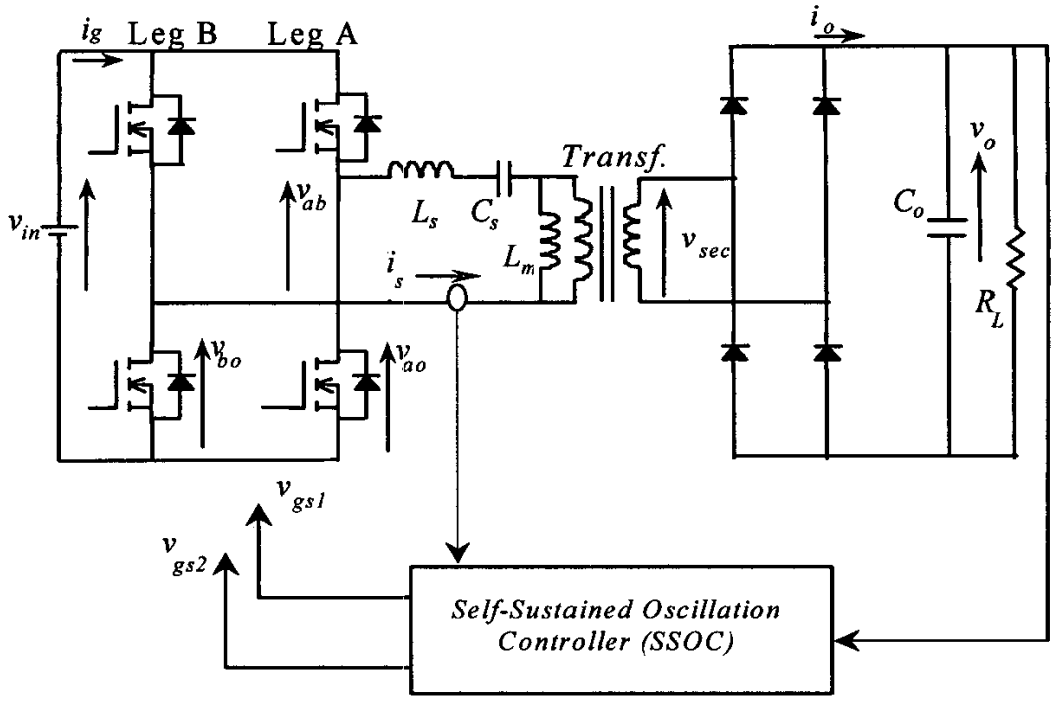

Fig. 2. Full bridge LLC resonant self-sustained dc-dc converter with capacitive output filter

The best feedback variable is the current through the resonant inductor that has a predominant first harmonic component and can easily be measured through a current transformer; also the stability is independent of the load. However, the other feedback variables like (v_{cs}) or (v_{cp}) cause the stability to rely on the loading conditions [5].

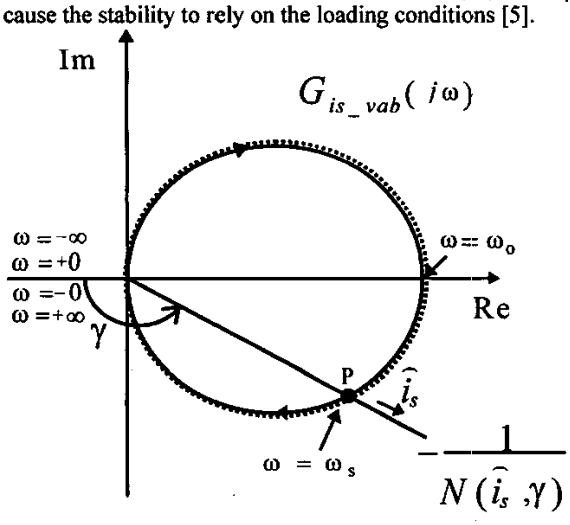

Fig. 3. Determination of the limit cycle stability condition for self-sustained oscillation in LLC resonant converter

In the case of the inductor current (i_s) as a feedback variable, the open loop transfer function from the inverter output voltage (v_{ab}) to the resonant current (i_s) found to be:

$$F_{is_vab}(s) = \frac{2}{\pi^2}\frac{s(s+k_l\omega_o Q_s)}{s^3 + s^2(1+k_l)\omega_o Q_s + \frac{s}{\omega_o^2} + k_l\omega_o^3 Q_s} \quad (3)$$

where $\omega_o = \frac{1}{\sqrt{L_s C_s}}$ =*Nominal series resonant frequency*, $k_l = \frac{L_s}{L_m}$, $Q_s = \frac{\omega_o L_s}{R_L}$ =*Series Quality factor*, R_L=*Load Resistance*, Where a stable limit cycle exists if the control angle is 90°<γ<180°[5]. Furthermore, in this particular range of the control angle, the current (i_s) lags the voltage (V_{ab}) that is necessary to achieve ZVS for switches [3].

The plot of the sinusoidal transfer functions $F_{is_vab}(j\omega)$, and the negative inverse describing function of the nonlinearity associated with the inverter and its controller. The arrows over the loci of the negative inverse describing functions indicate the direction of increasing amplitude of the feedback variable. Fig. 3 corresponds to the case where the current through the resonant inductor is used to generate (v_{ab}), that is $A = i_s$. The amplitude of the first harmonic component of the feedback variable, (A), is denoted as ($\hat{i}_s$).

III. Static Characteristics

The voltage and current stresses on the components of the converter can be obtained from the static characteristics of the converter. In this section a procedure for the derivation of the static characteristics of the LLC converter,

where the feedback variable is the current through the series resonant inductor is given. As demonstrated in the previous section, if the self-sustained oscillation exists, its amplitude and frequency must satisfy equation (2), this equality can be represented in two equations. One is associated with the real part and the other with the imaginary part:

$$[2-\alpha^2]\frac{\pi^2\omega_o L_s \hat{i}_s}{V_g} = -8(1+k_l)[-\frac{\alpha^2\pi^2}{8Q_s}\cos(\gamma)+\alpha\sin(\gamma)] \quad \text{(4-a)}$$

$$[4-\alpha^2]\frac{\pi^2\omega_o L_s \hat{i}_s}{V_g} = -\frac{16Q_S}{\pi^2}(1+k_l)[\cos(\gamma)+\frac{\alpha\pi^2}{8Q_s}\sin(\gamma)] \quad \text{(4-b)}$$

The simultaneous solution of the nonlinear algebraic equations (4-a), (4-b) results in possible operating points of the converter. This solution can be expressed in terms of the current through the resonant inductor and the switching frequency ratio ($\alpha = \frac{\omega_r}{\omega_o}$) as a function of the control angle (γ) for different values of quality factor (Q_s) as shown in Fig. 4. It is worth noting that these equations should have a solution, which corresponds to that the normalized frequency must be considered, which is ($\alpha > 1$).

From the static characteristics shown in Figs. 4, and 5, the voltage gain of the converter can be obtained. The voltage gain of the converter can be expressed in terms of the voltage conversion ratio that is defined as the ratio of the average voltage at the output (v_o) of a full bridge diode rectifier connected across the parallel resonant capacitor and the dc input voltage (v_g). After some manipulations it is found that the voltage conversion ratio is given by:

$$M = \frac{V_o}{V_g} = \frac{\pi}{4}\frac{\omega_o L_s \hat{i}_s}{V_g Q_s}\frac{1}{\sqrt{(\frac{k_1\alpha\pi^2}{Q_s 8}-1)^2+1}} \quad (4)$$

The voltage conversion ratio for various quality factor values is shown in Fig. 6.

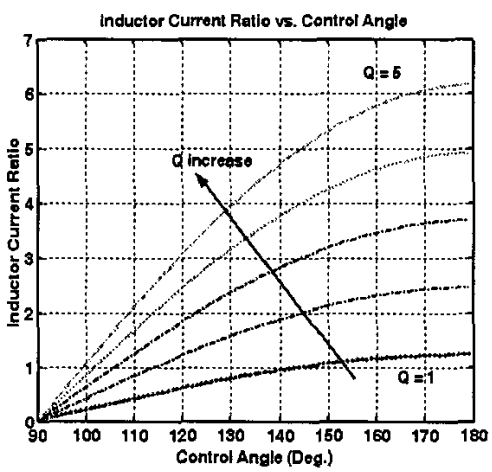

Fig. 4. Series resonant inductor current ratio vs. the control angle

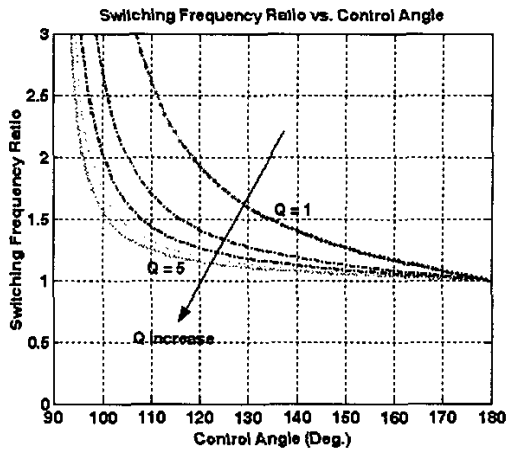

Fig. 5. Switching frequency ratio (α) vs. the control angle (γ)

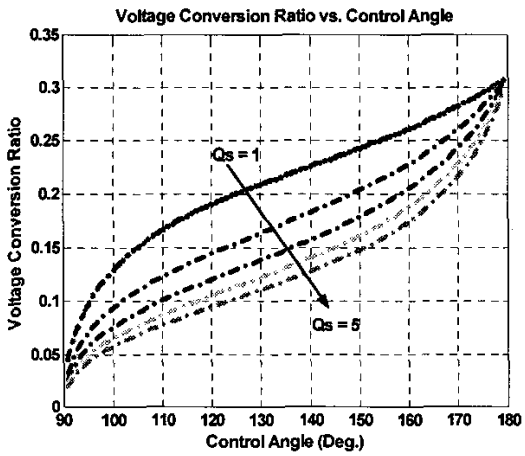

Fig. 6. Voltage conversion ratio as a function of the control angle

Fig. 4 shows that the stress on the inductor increases with the quality factor of the resonant tank (Q_s), whilst Fig. 5 provides a narrower regulating frequency range for higher values of (Q_s), a value of ($Q_s = 2.5$) is chosen in order to come up with a compromised solution. The resonant tank elements can be calculated based on this choice.

IV. Advantages of Proposed Controller over Variable Frequency Control

In order to illustrate the self-sustained robustness over the conventional variable frequency controller, the real-time uncertainty of resonant elements is considered such that:

$$0.8L_{sno} \le L_S \le 1.2L_{sno}$$
$$0.8C_{sno} \le C_s \le 1.2C_{sno} \quad (5)$$

where L_{sno} and C_{sno} are the nominal values of L_s and C_s respectively. The maximum voltage conversion ratio (M) of the converter, which ensures the operation above resonant frequency necessary for ZVS, was computed in PSIM simulation environment with parameter uncertainty range

as defined in (5), collected and shown in Figs. (7-a), (7-b) when equipped with both controllers each on a time. Fig. (7-a) shows the conventional variable frequency method will cause a reduction of (M) up to **62.5%**, which means a loss of ZVS.

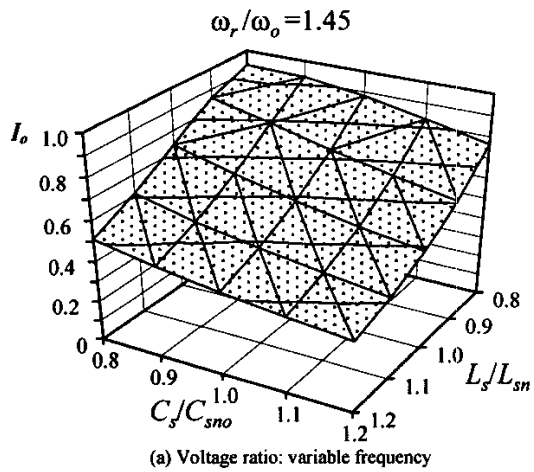

(a) Voltage ratio: variable frequency

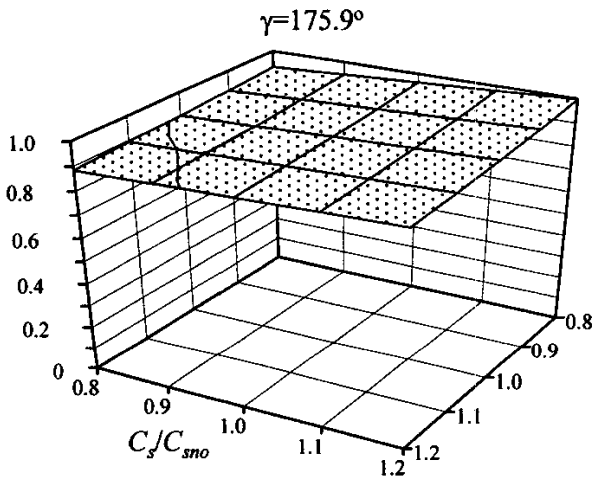

(b) Voltage ratio: SSOC

Fig. 7. PSIM Simulation Results: Maximum voltage conversion ratio

The proposed controller will have a negligible change of about **4.7%** on the maximum voltage conversion ratio to show its robustness as shown in Fig. (7-b).

V. Design Considerations

It is clear from Fig. 8 that at heavy loading conditions (high Q_s) the stress on the resonant capacitor and inductor becomes very high, Fig. 8 shows the stress on the resonant inductor when the control angle is 180° which corresponds to minimum input voltage and full load current operation, it is clear that a reasonable value for (Q_s) at full load around 1.5 can be chosen for the resonant tank otherwise higher (Q_s) values may result in a narrower range of input voltage to control the stresses on the resonant tank elements. However, this value may lead to the calculation of the series resonant inductance (L_s) to be 50 μH, and the series resonant capacitor (C_s) to be 75 nF.

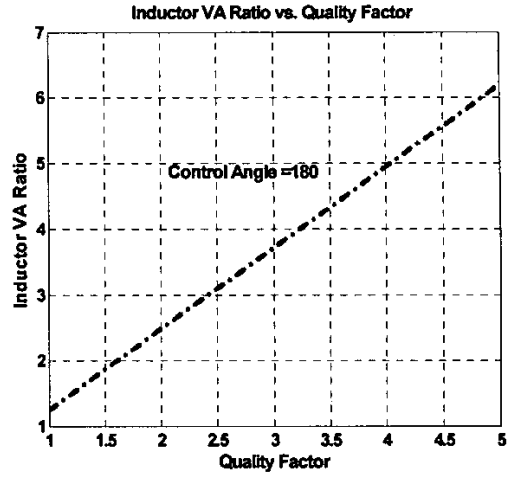

(a) Inductor stress vs. quality factor

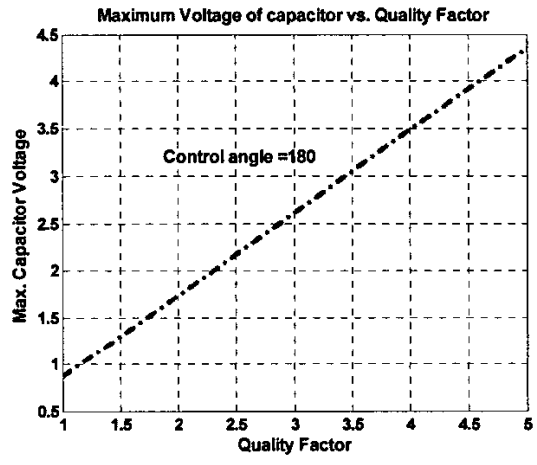

(b) Capacitor stress vs. quality factor

Fig. 8. Choice of resonant components based on stress

VI. Simulation Results

6. 1. Performance Evaluation

Fig. 9 shows the overall efficiency of the converter as a function of the input voltage for both VF and SSOC prototypes. It is possible to see that SSOC and VF result in similar performance at full load and minimum input voltage. However, as the input voltage increases or the output load decreases the SSOC method results in better efficiency than VF. This is because the SSOC results in a narrowed range of switching frequency. The parameters of the 1.2 kW converter modules working with input and output voltages of 250 to 400, 48 V respectively are tabulated below.

L_s	C_s	L_m	n_1:n_2	Rectifiers	C_o
50μH	75nF	500μH	5.34	SchottkyIXYSS20	220μF

Table I: Converter Parameters: SSOC Case

L_s	C_s	L_m	n_1:n_2	Rectifiers	C_o
208μH	15.8nF	60μH	4	SchottkyIXYSS20	220μF

Table II: Converter Parameters: VF Case

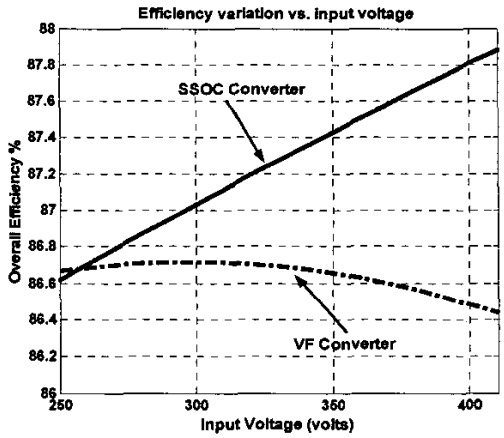

(a) Efficiency variation with the input voltage at full load

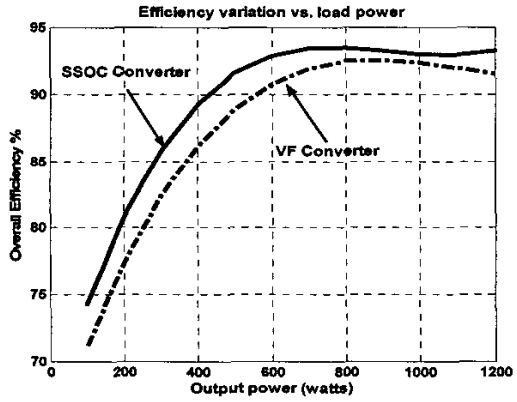

(b) Efficiency variations with the loading conditions at constant input voltage

Fig. 9. Simulation results: Efficiency for operation with VF and SSOC as a function of the input voltage with full load operation and as a function of the output power

6.2. Zero Voltage Switching (ZVS) Operation

The circuit was simulated with the parameters in Table I as given in Table I using PSIM6 software. The simulation results were recorded at no load, half load, and full load conditions to compare the behavior of the circuit under low and high quality factors. Fig. 10 shows that the resonant current lags the inverter output voltage to provide the necessary polarity to achieve ZVS under all operating conditions.

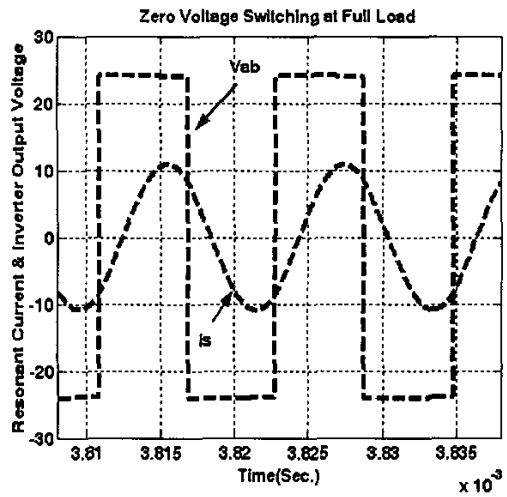

(a) ZVS at Full load

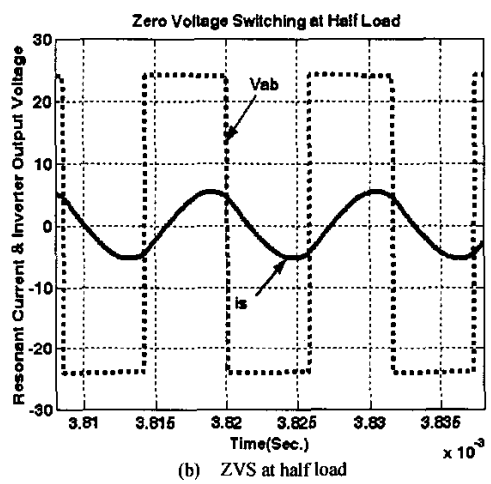

(b) ZVS at half load

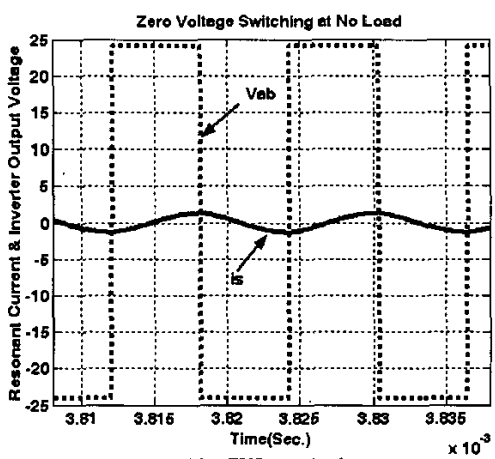

(c) ZVS at no load

Fig. 10. ZVS under various loading conditions

VI. CONCLUSIONS

The operation of LLC resonant converter working under SSOC has been investigated in this paper. Steady state characteristics are developed using MATALB. In addition, a conventional variable frequency converter is also presented for performance comparison. PSIM results proved that the proposed converter is robust towards the aging variation of the resonant tank elements. It has been shown that the self-sustained oscillation controller (SSOC) results in a ten times increase in the value of the magnetizing inductance, which simplifies the transformer. The converter maintains zero voltage switching over the working range. Predictions using simulation show that it can attain a 3% better efficiency than the variable frequency converter.

REFERENCES

[1] L. H. Mweene, C. A. Wright, and M. F. Seglecht, "A 1 kW 500 kHz Front-end Converter for A Distributed Power Supply System," *IEEE Transactions on Power Electronics, vol. 6, July 1991. pp. 398-407.*

[2] Bo Yang, Fred C. Lee, Alpha Zhang, and G. Huang, "LLC Resonant Converter for Front End DC/DC Conversion," *Proceedings of the IEEE Applied Power Electronics Conference, February 2002, pp.1108-1112.*

[3] R. L. Steigerwald, "A Comparison of Half-Bridge Resonant Converter Topologies," *IEEE Transactions on Power Electronics, vol. 3, Apr. 1988.pp.174-182.*

[4] J. Lazar, and R. Martinelli," Steady-State Analysis of the LLC Series Resonant Converter," *Proceedings of the IEEE Applied Power Electronics Conference, March 2001. pp 728-735.*

[5] H. Pinheiro, P. Jain, and Geza Joos, "Self-Sustained Oscillation Resonant Converters Operating Above the Resonant Frequency," *IEEE Transactions of Power Electronics, issue 5, volume 14,September 1999, pp.803-815.*